15 East Avenue Athens, TN 37303

(800) 521-2855

bullbbq.com

Brahma Premium Grill

Owner's Manual

SKU# 57568 LIQUID PROPANE (LP)
SKU# 57569 NATURAL GAS (NG)

C US CERTIFIED DESIGN CERTIFIED SANITATION NSF/ANSI 4

USA EDITION

Important Safety Warnings

This appliance is FOR OUTDOOR USE ONLY. This appliance must not be used in a building, garage, or any other enclosed area.

WARNING: This appliance is not intended to be installed in or on a boat or recreational vehicle.

WARNING: Ensure that your grill is properly installed, assembled, and maintained. Failure to adhere to these accompanying instructions may result in fire or explosion, causing serious bodily injury or death, and/or property damage.

WARNING: Do not use charcoal, wood, or any other foreign fuel source in this grill. Use only the appropriate gas that this grill was designed to work with. Failure to adhere to this warning may result in fire or explosion, causing serious bodily injury or death, and/or property damage.

⚠ **DANGER**

If you smell gas:

- **Shut off gas to the appliance.**
- **Extinguish any open flame.**
- **Open Lid.**
- **If odor continues, keep away from the appliance and immediately call your gas supplier or your fire department.**

⚠ **WARNING**

- **Do not store or use gasoline or other flammable liquids or vapors in the vicinity of this or any other appliance.**
- **An LP cylinder not connected for use shall not be stored in the vicinity of this or any other appliance.**

⚠ **WARNING:** This product may expose you to chemicals including lead which is known to the State of California to cause birth defects or other reproductive harm.
For more information, visit: www.P65Warnings.ca.gov

IMPORTANT: Installation of this appliance must conform to local codes. In the absence of local codes, installation must conform to one of the following:

- ANSI Z223.1/NFPA 54
- CSA B149.1
- CSA B149.2

IMPORTANT: This appliance utilizes an external electrical source; therefore, this appliance, when installed, must be electrically grounded in accordance with local codes. In the absence of local codes, this appliance must be electrically grounded in accordance with one of the following:

- NFPA 70
- Canadian Electrical Code, Part 1

We care about your safety, so please...

Read and follow all warnings and instructions before assembling and cooking with your grill.

Retain this manual for future reference.

Table of Contents

Grill Operational Safety	*4*
Liquid Propane (LP) Safety Guidelines	*5*
Liquid Propane (LP) Gas Requirements	*6*
Natural Gas (NG) Requirements	*7*
Checking for Gas Leaks	*8*
Determining the Location of the Grill	*9*
Grill Enclosure Requirements	*10*
Electrical Requirements	*13*
Lighting the Grill	*14*
Burner Flames	*16*
Burner Maintenance	*17*
Burner Installation	*18*
Cleaning the Grill	*19*
Troubleshooting	*20*
Product Warranty and Registration	*22*
Replacement Parts List	*23*
Gas Plumbing Replacement Parts List	*24*
Electrical Replacement Parts List	*25*
Warranty Policy	*26*

Service Information

Model Number:

☐ 57568 (LP)

☐ 57569 (NG)

Serial Number:_____

Date of Purchase:_____

Place of Purchase: _____

Fuel Type:

☐ Liquid Propane (LP)

☐ Natural Gas (NG)

Grill Operational Safety

Grill Design Change:

We have recently made updates to our grill design! Grills made before December 2025 may visually differ from the images shown in this manual.

WARNING: During use, and for some time afterwards, the grill will become and stay hot enough to cause serious burns. Do not leave children or pets unattended within the vicinity of the grill until it is no longer in use and has cooled completely. Never allow children to sit, stand, or play on or around the grill.

- Never allow children to operate the grill.
- Never lean over cooking surface while lighting grill.
- Never place objects or utensils on top of grill lid.
- Use barbecue tools with insulated handles and dry, good quality insulated oven mitts when operating the grill. Wet or damp mitts/gloves/pot holders may cause steam burns.
- Allow grill to cool completely prior to transporting or covering your grill for storage.
- Do not place grill under or on top of any surface that will burn.
- Do not allow obstructions or restriction of the flow of combustion and ventilation air around the grill housing.
- Do not build the grill into any combustible structure that is closer than 21 inches from the sides and back.
- Keep the vent openings of the cylinder enclosure, if applicable, free and clear from debris. Clean your grill only with the recommended cleaning agents.
- Keep any electrical supply cord and the fuel supply hose away from any heated surfaces.
- Keep the area encompassing your grill free and clear from any combustible materials, gasoline, and other flammable vapours and liquids.
- Do not operate this grill in temperatures below 0°F (-17°C).

Gas Conversion Kits:

Gas valves are preset at the Bull factory to operate on either LP gas or Natural Gas. If you wish to convert to a different gas type aside from LP or Natural Gas, be sure to contact your grill dealer, licensed plumber, or authorized service center for further details. Conversion kits will only be sold to professionals to perform conversion service. Failure to properly convert a unit can cause severe injury to yourself and/or others, irreparable damage to your grill and void your warranty.

***INSECT ALERT:** Spiders and small insects occasionally spin webs or make nests inside the burners during warehousing, transit, and/or after long periods of non-use. These webs or nests can create a hazardous situation where gas flow is redirected and cause a fire type known as "FLASH BACK". This type of fire can cause serious damage to your grill and create an unsafe operating condition. Frequent inspections and care are recommended and detailed further on page 17.*

Liquid Propane (LP) Safety Guidelines

⚠ **DANGER:**

- Do not store a spare LP gas cylinder under or near this appliance.
- Never fill the cylinder beyond 80% full.
- If the information above is not followed exactly, a fire causing death or serious injury could occur.

To avoid risk of fire or explosion, please take these safety precautions:

- Never connect an unregulated LP gas cylinder to the grill.
- Do not subject LP gas cylinder to excessive heat.
- The LP gas cylinder must be constructed and marked in accordance with the *Specifications for LP gas Cylinders* of the U.S. Department of Transportation (DOT), or the standard for Cylinders, Spheres and Tubes for the Transportation of Dangerous Goods CAN/CAS-B339.
- The LP gas cylinder must be provided with a listed overfilling prevention device.
- The LP gas cylinder must be provided with a cylinder connection device compatible with the connection for outdoor cooking appliances.
- Never use an LP gas cylinder that is visibly damaged, dented, or rusty.
- The LP gas cylinder must include a collar to protect the cylinder valve from damage.
- Ensure the LP gas cylinder has appropriate vapor withdrawal.
- Avoid unnecessary twisting of the hose.
- Prior to each use, visually inspect the LP hose for cuts, cracks, excessive wear or damage.
- The supplied pressure regulator and hose assembly (Bull part# 16589) must be used. Replacement pressure regulator and hose assemblies must be the type specified by Bull Outdoor Products.

When the appliance is not in use:

- The gas shall be turned off at the supply cylinder.
- The grill may be stored indoors if and only if the cylinder is disconnected and removed from the grill.
- The LP cylinders shall be stored outdoors out of reach of children and shall not be stored in a building, garage, or any other enclosed area.

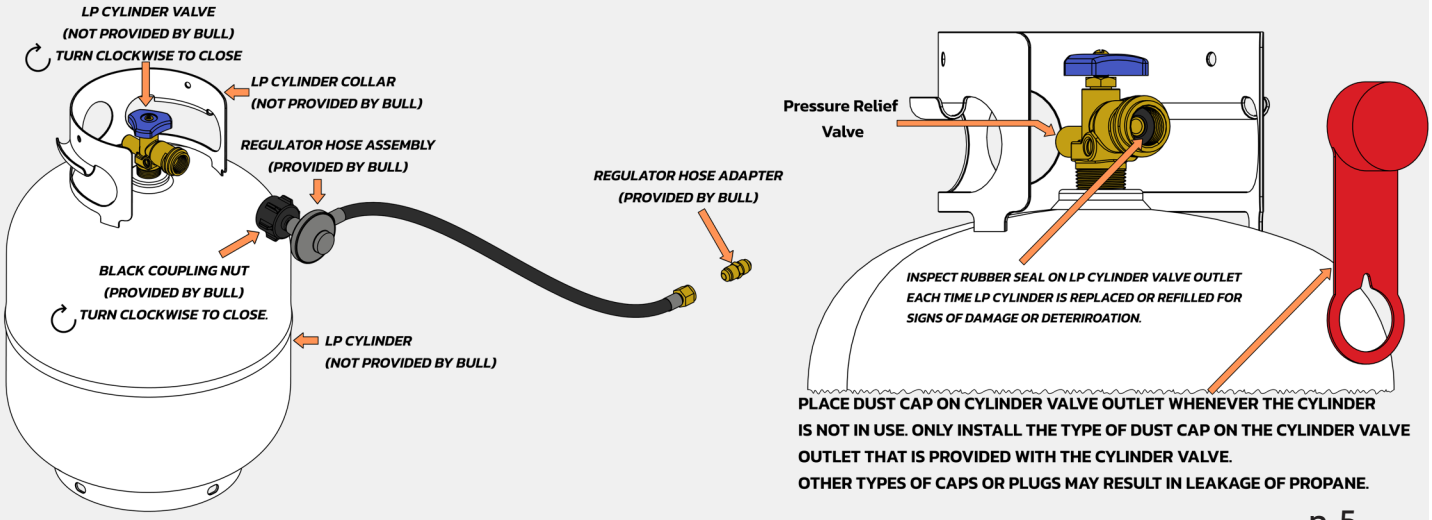

PLACE DUST CAP ON CYLINDER VALVE OUTLET WHENEVER THE CYLINDER IS NOT IN USE. ONLY INSTALL THE TYPE OF DUST CAP ON THE CYLINDER VALVE OUTLET THAT IS PROVIDED WITH THE CYLINDER VALVE.
OTHER TYPES OF CAPS OR PLUGS MAY RESULT IN LEAKAGE OF PROPANE.

Liquid Propane (LP) Gas Requirements

Your propane gas grill (SKU# 57568) is designed to operate on propane gas only. Each grill is shipped with an LP regulator hose assembly.

Connection to the Grill: The LP regulator hose assembly connects to the grill through a stainless steel flex tube via provided 3/8" flare union adapter*.

*3/8" refers to the tube outside diameter, *not* thread size.

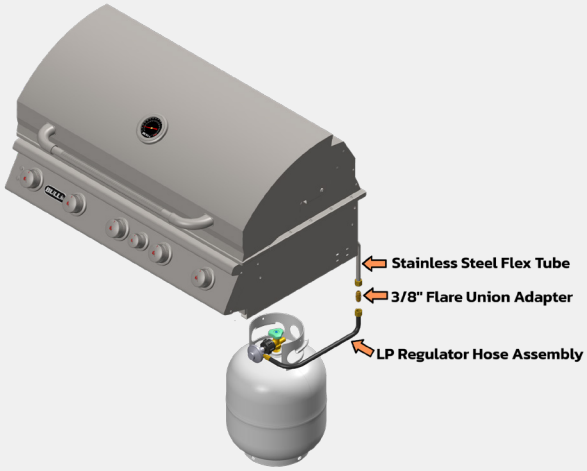

Cylinder Size: This grill was designed for use with a standard 20lb (5 gallon) LP gas tank with a Type 1 connection.
Inlet Pressure: The provided LP regulator hose assembly maintains an 11" W.C. pressure at the inlet.
Cylinder Retention: Integral retention of the LP gas cylinder is required to limit movement of the cylinder. Bull offers many options to satisfy this requirement.

- For built-in applications, SKU# 16674 can be utilized and is shown below.
- For installation in a Bull Grill Cart, SKU# 55510, an integrated retention system is provided standard.
- Never mount the cylinder in an orientation such that the pressure relief valve is pointed towards the normal operating position of the user.

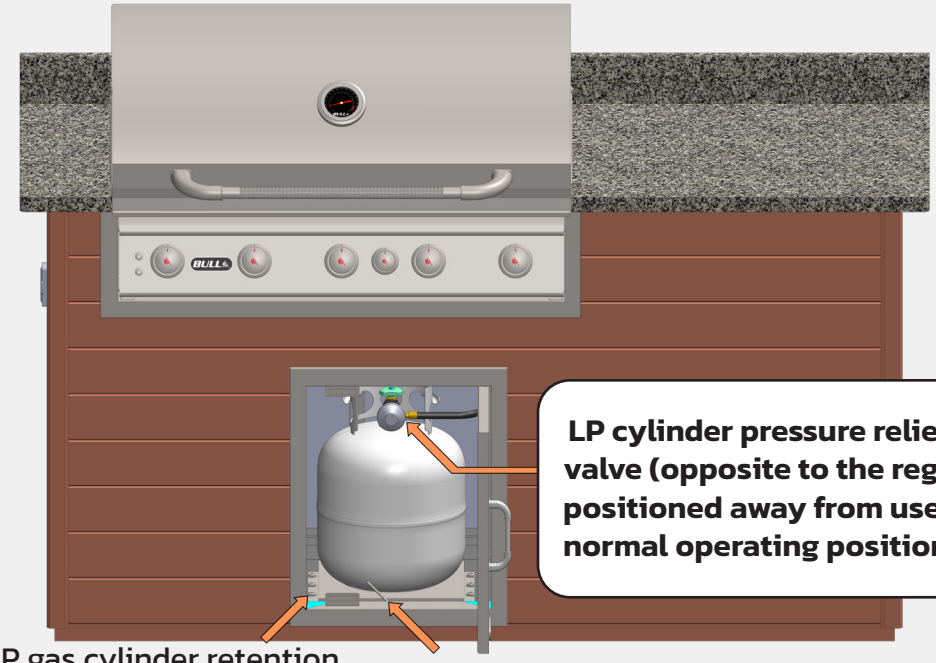

Bull 16674 LP gas cylinder retention system secured to enclosure with:

- 8x Screws
- 8x Washers
- 8x Locknuts

Bull 16674 LP gas cylinder retention bolt.
To secure cylinder:

- Turn clockwise

To remove cylinder:

- Turn counterclockwise

Natural Gas (NG) Requirements

Your natural gas grill (SKU# 57569) is designed to operate on natural gas only. Each grill is shipped with an NG regulator fastened to the interior side panel of the grill.

Connection to the Grill: The NG regulator is shipped pre-assembled with two 3/8 NPT to 3/8" Flare* adapters (one at inlet and one at outlet).

- The provided stainless steel flex hose connects the grill to the outlet of the regulator.
- An additional stainless flex hose with a 3/8" Female Flare* connection (not provided by Bull) is required to be connected to the regulator and adapter.
- This installer-supplied hose must be connected to an installer-supplied safety shut-off valve located and installed per local codes, or if in areas bereft of local codes, in accordance with ANSI Z223.1/NFPA 54 *or* CSA B149.1.
- All installer-supplied components for connecting the grill to a fixed fuel piping system such as rigid pipe, semi-rigid tubing, and/or connectors must comply with ANSI Z21.75 • CSA 6.27.
- Do not use Teflon® tape or pipe sealant on any flare ends. Doing so will not allow for a leak-free seal.
- Only use pipe sealing compound or pipe thread tape of the type resistant to the action of natural gas to at least the first three threads of all male pipe threads when making the connection.

*3/8" refers to the tube outside diameter, *not* thread size.

Manifold Pressure: The provided NG regulator maintains an 4" W.C. pressure at the outlet.

Pressure Testing: When pressure testing is performed:

- This grill, along with its individual shut-off valve, must be disconnected from the gas supply piping during any pressure testing of that system at test pressures in excess of 1/2 psi (3.5 kPa)
- This grill must be isolated from the gas supply piping system by closing its individual shut-off valve during any pressure testing of the gas supply piping system at test pressures equal to or less than 1/2 psi (3.5 kPa).

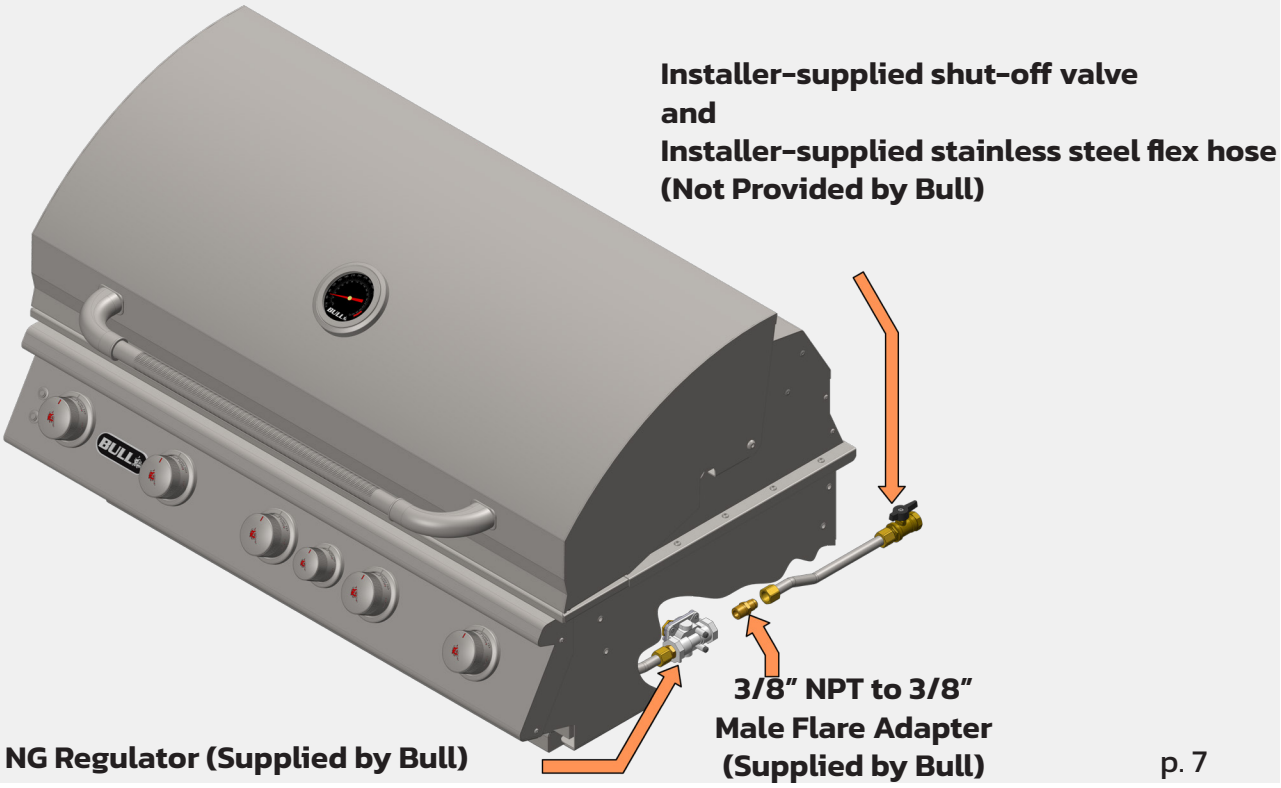

Checking for Gas Leaks

When should I test for leaks?

A comprehensive leak test should be performed:

- After initial installation of the grill is complete, and before first using the grill.
- Periodically before (and throughout) the start of a new grilling season.
- For LP model grills, check each time an LP gas cylinder is connected to the grill.
- If you smell gas... however, recall the warning below! Turn off the gas to the grill, and ensure the odor does not linger before continuing with the leak test.

> ⚠ **DANGER**
>
> **If you smell gas:**
> - **Shut off gas to the appliance.**
> - **Extinguish any open flame.**
> - **Open Lid.**
> - **If odor continues, keep away from the appliance and immediately call your gas supplier or your fire department.**

How do I perform a leak test?

- It is recommended to use a leak detection compound conforming to MIL-L-25567D. Alternatively, mix a 1:1 solution of liquid detergent and water into a spray bottle.
  - ◊ ***Never use an open flame to test for leaks***.
- Ensure all heat control valves are turned off and then turn on the gas supply.
- Apply the leak detection solution to all components of the gas delivery system, which consists of valves, connectors, piping, and hoses, at every point from the gas supply to the burners.
- Visual indicators of a failed test are any blowing bubbles present in the leak detection solution.
- Olfactory indicators of a failed test are any faint sulfurous smells present similar to that of rotten eggs.

IMPORTANT: Rectify any leaks immediately and do not use the grill until all connections have been checked and are leak-free.

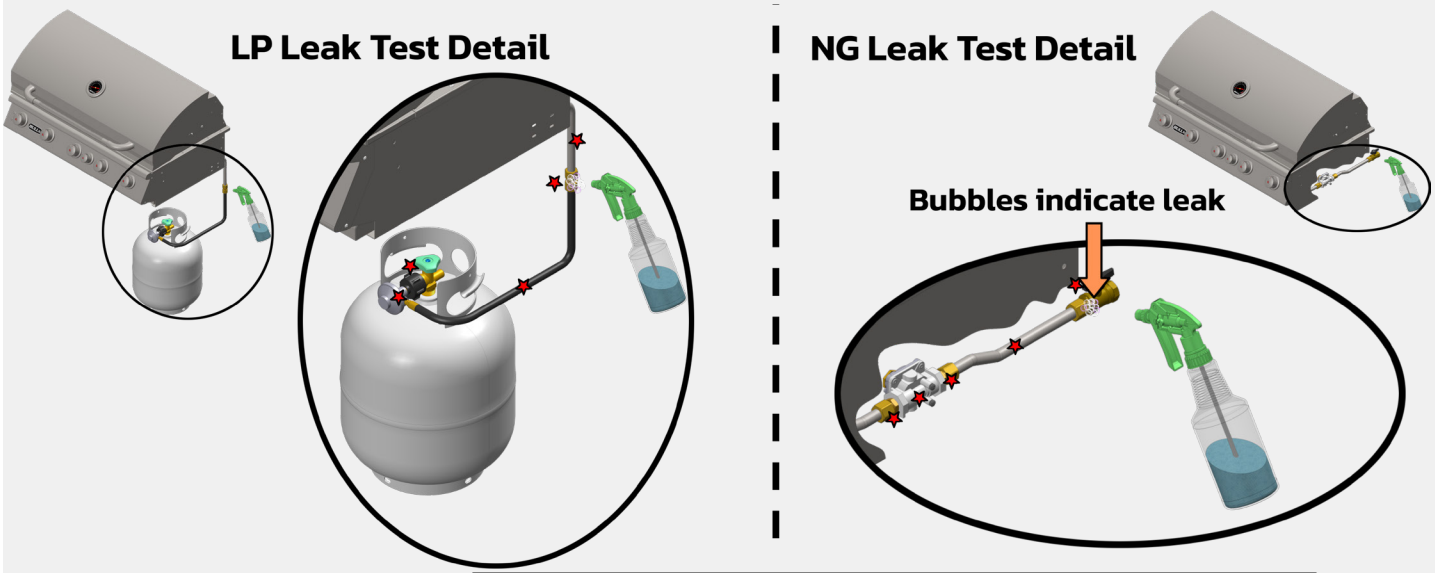

✶ **Apply Solution at locations indicated by this symbol**

Determining the Location of the Grill

This grill is for outdoor use only. An appliance is considered to be outdoors if:

- Installed with shelter no more inclusive than with walls on three sides, but with no overhead cover; all openings must be permanently open; sliding doors, garage doors, windows, or screened openings are not considered as permanent openings. **OR**

- Installed with shelter no more inclusive than within a partial enclosure that includes an overhead cover and no more than two sidewalls. The sidewalls may be parallel, as in a breezeway, or at right angles to each other; all openings must be permanently open; sliding doors, garage doors, windows, or screened openings are not considered as permanent openings. **OR**

- Installed with shelter no more inclusive than within a partial enclosure that includes an overhead cover and three sidewalls, as long as 30% or more of the horizontal periphery of the enclosure is permanently open. All openings must be permanently open; sliding doors, garage doors, windows, or screened openings are not considered as permanent openings.

- This appliance is not intended to be installed in or on a boat or recreational vehicle.

Clearance to Combustible Materials

For both, portable, and built-in grills:

- Maintain a distance of 21" from both sides and back of the grill to any combustible materials.

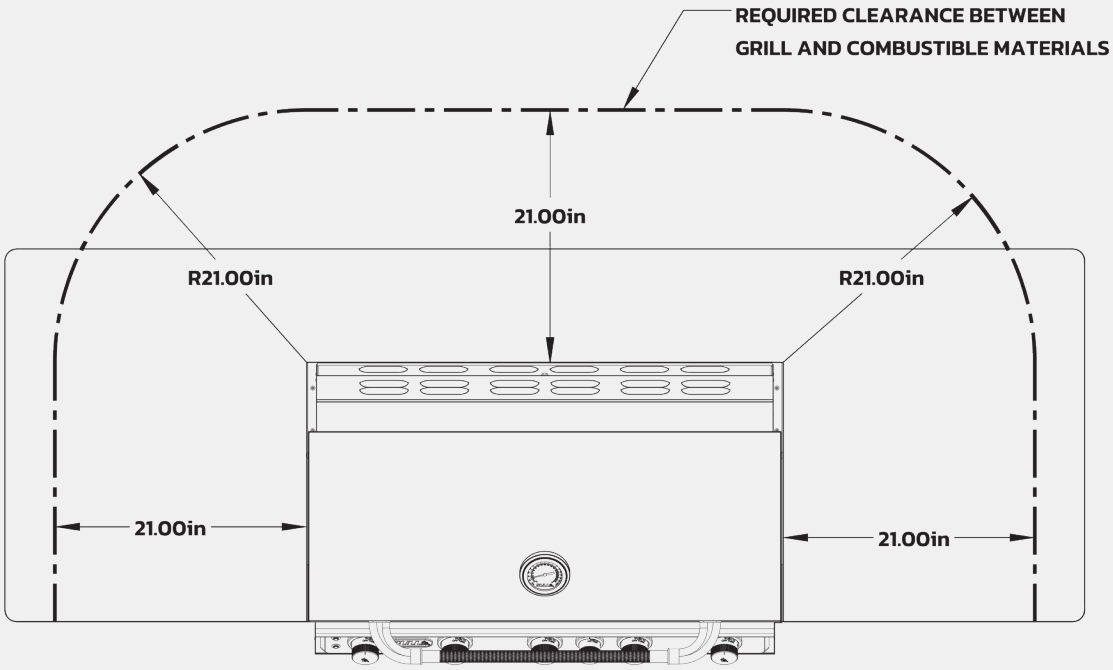

For built-in grills:

- If installed under overhead combustible construction, a suitable UL 710 approved heavy duty vent hood must be installed in conjunction with the grill.
- The vent hood must be placed in operation while the grill is being used.

For portable grills (such as those installed on carts):

- Under no circumstance is it permitted that the grill be used under any overhead combustible materials.

Grill Enclosure Requirements

When installing the grill for built-in applications, do not use any combustible materials for the grill enclosure construction.

LP Cylinder Enclosure Required Provisions:

For LP grill models (SKU# 57568), additional considerations must be made when constructing the enclosure:

- The grill enclosure must contain a separate, isolated enclosure for storage of the LP gas cylinder. The storage for the LP gas cylinder must be designed such that only the LP gas cylinder being used can fit in this compartment. It should not be physically possible to store a spare LP gas cylinder vertically, horizontally, or in any orientation within the enclosure when the LP gas cylinder currently in use is installed and properly retained.
- This separate enclosure for the LP gas cylinder shall isolate the cylinder from the burner compartment in order to provide:
  - ◊ Shielding from radiation
  - ◊ A flame barrier
  - ◊ Protection from foreign material, such as hot drippings
- There must be a minimum of 2 inches between the floor of the LP gas cylinder enclosure and the ground.
- The LP gas cylinder must be easily connected and disconnected, and connections shall be able to be tested outside the cylinder enclosure.
- Connections which could be disturbed when installing the cylinder must be accessible for leak testing inside of the enclosure.
- The LP gas cylinder enclosure must include some means of retention as detailed on page 6.

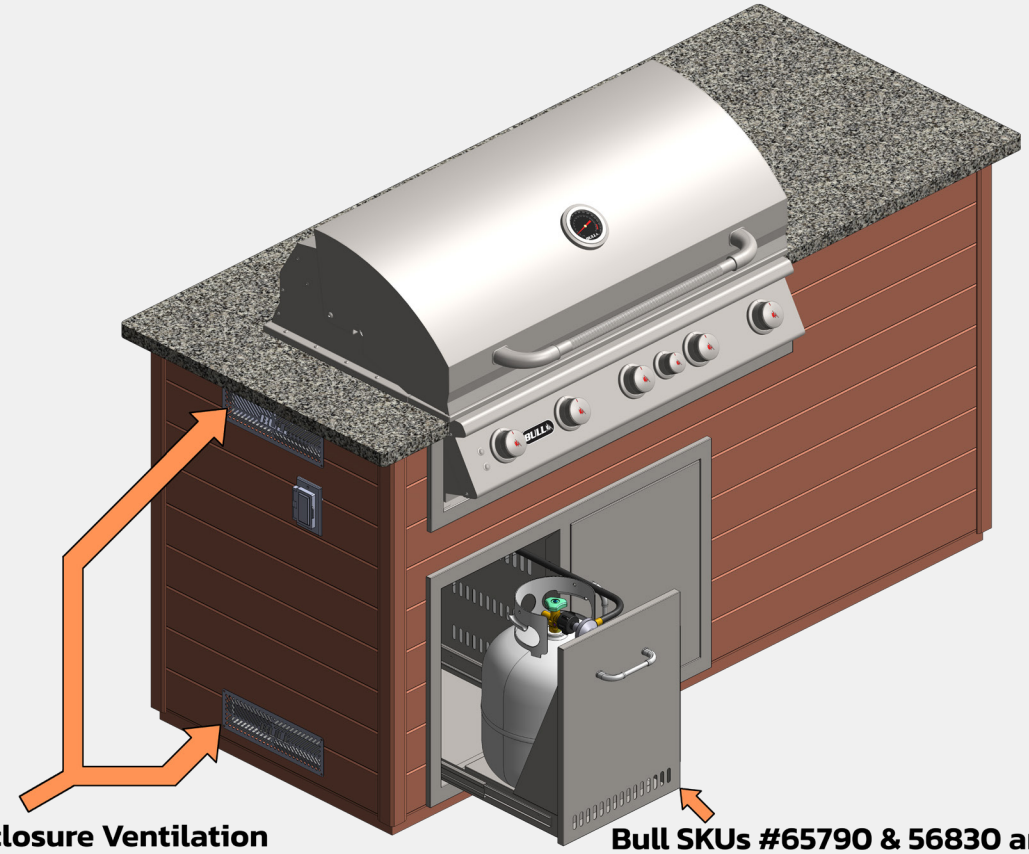

Required Enclosure Ventilation

Bull SKUs #65790 & 56830 are available to help satisfy requirements above

LP Cylinder Enclosure Ventilation:

⚠**WARNING:** Failure to adequately ventilate your outdoor kitchen could result in an explosion or fire.

The enclosure for the LP gas cylinder shall be properly ventilated. The proper ventilation of the enclosure shall be accomplished by one of the following options:

1. One side of the enclosure shall be completely open.

2. For a cylinder enclosure having four sides, a top, and a bottom, and intended for installation in a built- in enclosure:
   - ◊ At least one ventilation opening shall be provided on the exposed exterior side of the enclosure located within 5 in (127mm) of the top of the enclosure and unobstructed. The opening(s) shall have a total free area of not less than 1 in²/lb (14.2 cm²/kg) of stored fuel capacity (20in² for a 20lb LP gas cylinder).
   - ◊ At least one ventilation opening shall be provided on the exposed, exterior side of the enclosure 1 in (25.4 mm) or less from the floor level and shall have a total free area of not less than 1/2 in²/lb (7.1 cm²/kg) of stored fuel capacity (10in² for a 20lb LP gas cylinder). The upper edge shall be no more than 5 in (127mm) above the floor level.
   - ◊ Every opening shall have a minimum dimension so as to permit the entrance of a 3/16 in (4.8mm) rod.

IMPORTANT: The requirements listed above are the MINIMUM. Bull recommends having ventilation openings on all exposed exterior sides at both top and bottom. The ventilation openings should be sized and located as outlined above.

Grill Counter top Cutout Dimensions:

Dimensions shown below are in inches and for use with non-combustible constructions only. To prevent dust accumulation in hard-to-clean areas, leave the cavity that the grill fits in open as shown below.

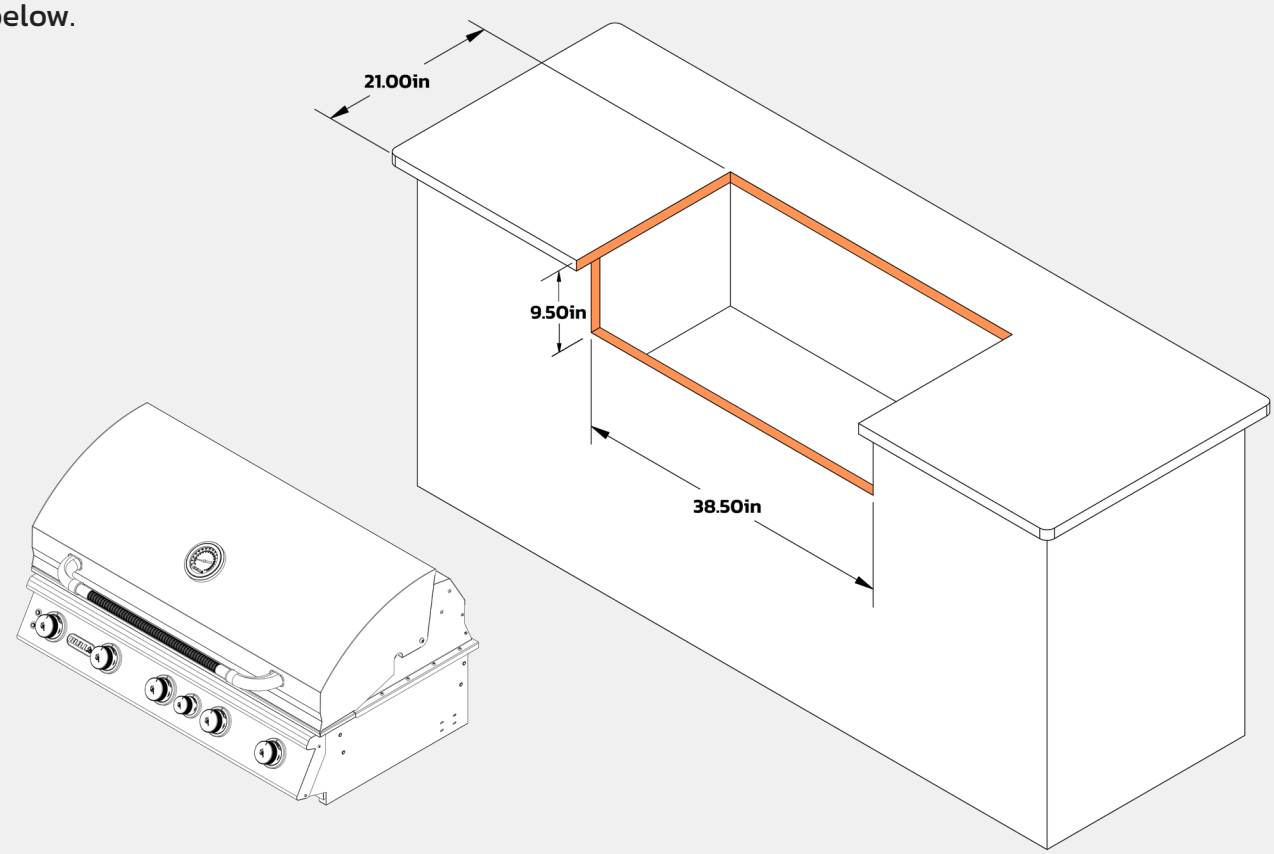

Additional Requirements for Commercial Applications:

This appliance is certified to NSF/ANSI 4:2024 when properly installed.

It is the responsibilty of the installer to ensure that the surrounding enclosure for the appliance meets all applicable national standards as well as any local standards enforced by the authority having jurisdiction (AHJ).

- The grill must be sealed to the counter to establish proper sanitary operation.
- All edges of the grill that contact the countertop shall be sealed with an NSF/ANSI 51 certified sealant for use in the food zone.
- If wheels are utilized for the grill enclosure, wheels must comply with NSF/ANSI 2.
- If wheels are not utilized, the base of the enclosure must be sealed to the floor using NSF/ANSI 51 certified sealant.
- Further, Bull recommends the use of NSF/ANSI 51 certifed surfaces or materials for use in the food zone on any part of the grill enclosure that will, or may possibly, come into contact with food (countertops and backsplashes for instance).
- Once sealed in accordance with the above, the result is intended to prevent liquid spillage on adjacent surfaces of the floor or countertop from passing under inaccessible portions of the equipment.

Installers should verify compliance of enclosure and sealant materials directly from NSF's website:
https://listings.nsf.org/#/certified-products-systems

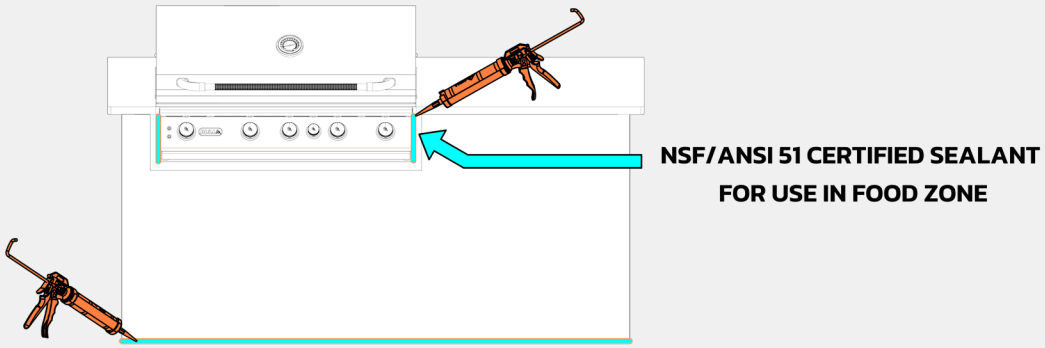

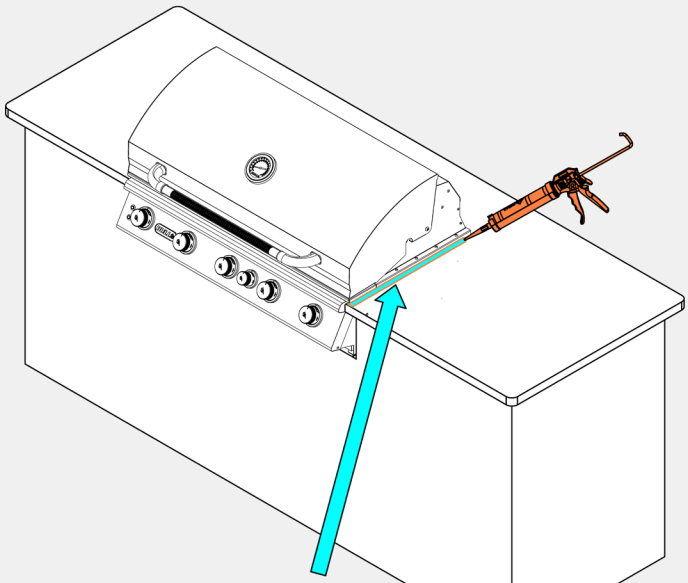

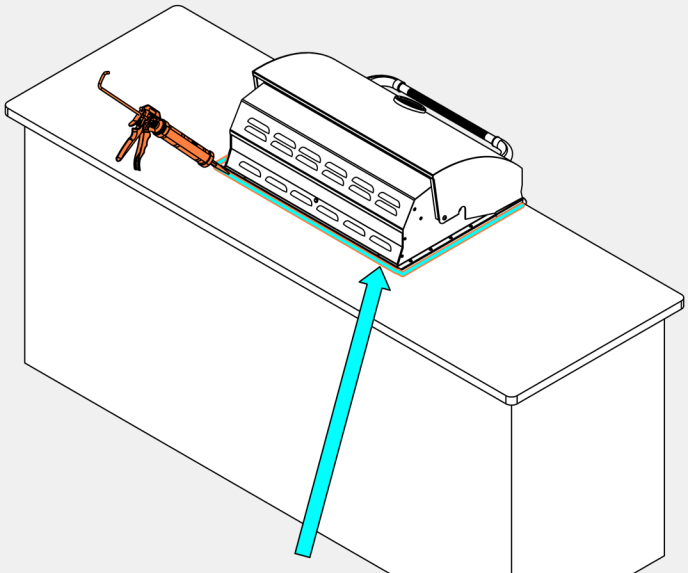

Electrical Requirements

This grill utilizes AC power for grill interior lighting and control panel lighting. The grill must be electrically grounded in accordance with local codes, or with NFPA 70 or the Canadian Electrical Code Part I in areas without local codes.

Additionally, the following safety measures must be followed:

- To protect against electric shock, do not immerse cord or plugs in water or other liquid.
- Unplug from the outlet when not in use and before cleaning. Allow to cool before putting on or taking off parts.
- Do not operate any outdoor cooking gas appliance with a damage cord or plug, or after the appliance malfunctions or has been damaged in any manner. Contact Bull for repair.
- Do not let the cord hang over the edge of a table or touch hot surfaces.
- Do not use an outdoor cooking gas appliance for purposes other than intended.
- When connecting, first connect plug to the outdoor cooking gas appliance then plug appliance into the outlet.
- Use only a Ground Fault Circuit Interrupter (GFCI) protected circuit with this outdoor cooking gas appliance.
- Never remove the grounding plug or use with an adapter of two prongs.
- Use only extension cords with a three-prong grounding plug, rated for the power of the equipment and approved for outdoor use with a W-A marking.

Transformer Installation:

To help expand the longevity of the provided transformer and interior lighting system, Bull recommends installing the transformer at least 6 inches above the ground. Each transformer attaches to the grill enclosure via four mounting holes with screws (not provided by Bull).

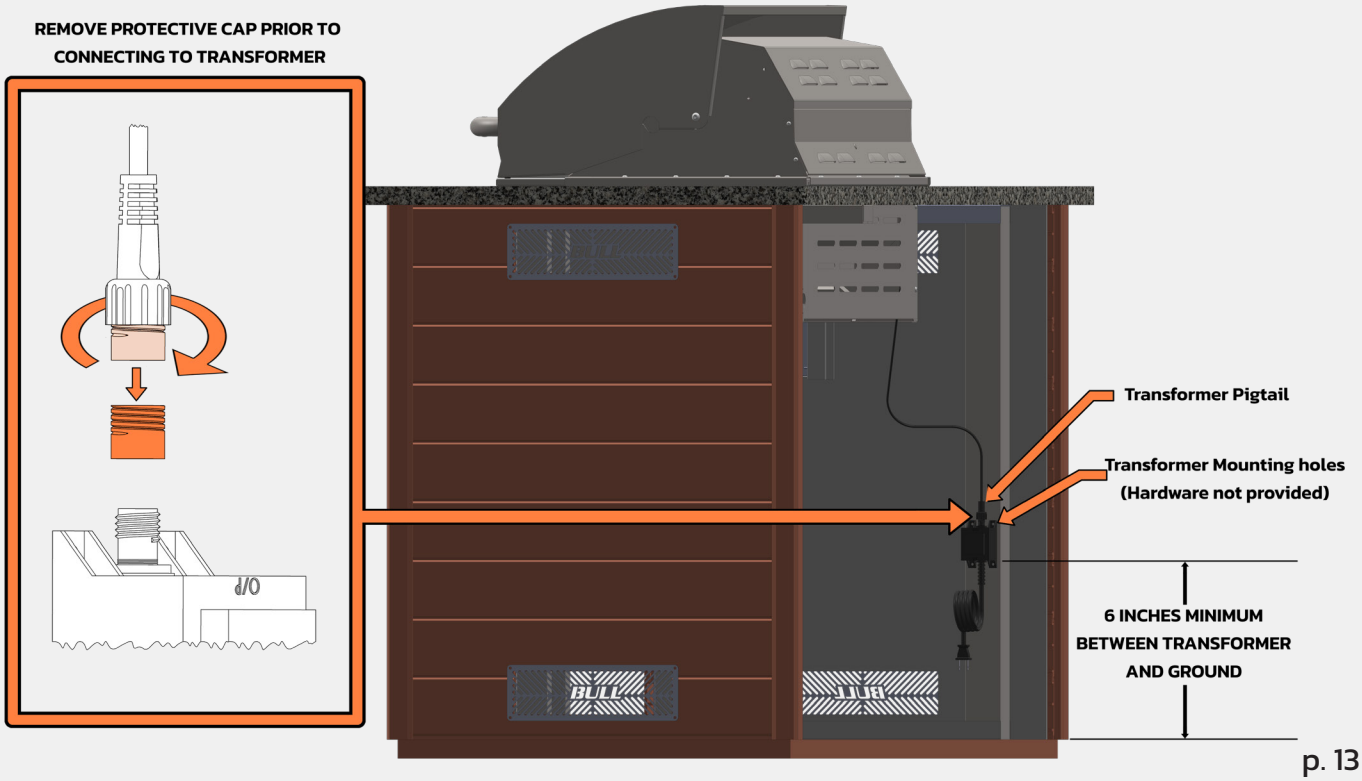

Lighting the Grill

Prior to lighting your grill, ensure you have become familiar with the safety guidelines and instructions presented in this manual thus far.

Never attempt to light your grill if you smell any odor resembling gas. Perform a leak test as prescribed in this document before proceeding.

Grill Standard Lighting Procedure:

1. Begin by confirming that all burner control valves are set to the "OFF" position.
2. Turn the supply gas on.
3. Push in the control knob of the burner you intend to light. Slowly, for roughly 3–4 seconds, rotate the knob counterclockwise by approximately a 1/4 turn. An audible *CLICK* should be heard. By the time the click is heard, the burner orifice should have provided enough gas to ignite and a visible flame should be present. **If the burner does not ignite, immediately return the control knob to the "OFF" position**; wait five minutes for any gas to disperse and repeat this process.
4. Adjust the control knob(s) to the desired cooking temperature.

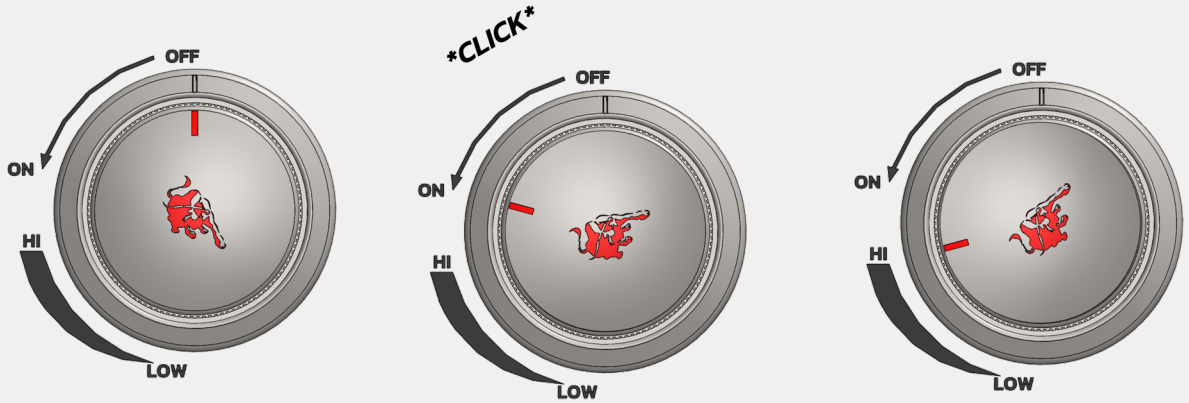

Infrared Burner Lighting Procedure:

Lighting the rear infrared burner (smaller, middle control knob) follows the same basic procedure listed above with only a couple of differences highlighted below.

1. Begin by confirming that all burner control valves are set to the "OFF" position.
2. Turn the supply gas on.
3. Push in the control knob of the burner you intend to light. Slowly, for roughly 5–10 seconds, rotate the knob counterclockwise by approximately a 1/4 turn. An audible *CLICK* should be heard. By the time the click is heard, the burner orifice should have provided enough gas to ignite. **If the burner does not ignite, immediately return the control knob to the "OFF" position**; wait five minutes for any gas to disperse and repeat this process.
4. The infrared burner is either "ON" or "OFF", there are no adjustments. Do not attempt to regulate the infrared burner by using the control knob.

Grill Manual Lighting Procedure:

If the ignitors fail to produce a spark at the electrode tip, the burners can be manually ignited using a long reach match and provided match holder. Alternatively, a long-necked lighter may be used.

Standard Burners:

1. Begin by confirming that all burner control valves are set to the "OFF" position.
2. Turn the supply gas on.
3. Use provided match holder, or long-necked lighter, placing the flame near to the burner ports.
4. Push in the control knob of the burner you intend to light. Slowly, for roughly 3-4 seconds, rotate the knob counterclockwise by approximately 1/4 turn. An audible *CLICK* should be heard. By the time the click is heard, the burner orifice should have provided enough gas to ignite. If the burner does not ignite, immediately return the control knob to the "OFF" position; wait five minutes for any gas to disperse and repeat this process.
5. Adjust the control knob(s) to the desired cooking temperature.

Infrared Burner:

1. Begin by confirming that all burner control valves are set to the "OFF" position.
2. Turn the supply gas on.
3. Use provided match holder, or long-necked lighter, placing the flame near to the burner ports.
4. Rotate the knob counterclockwise to the "HIGH" or "ON" setting to release gas. The burner should light immediately. After lighting, keep the lid closed when using the infrared burner.

NOTE: It may take a few attempts to ignite the infrared burner

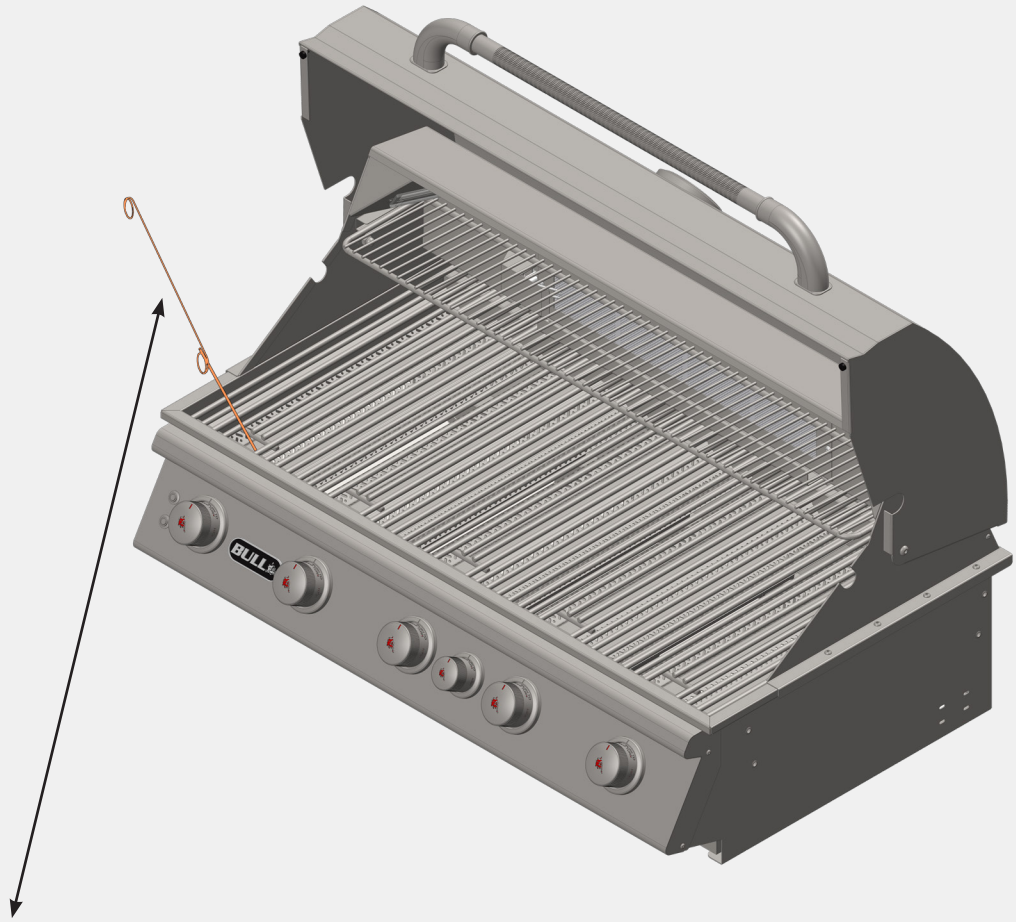

Match holder (SKU 97022)

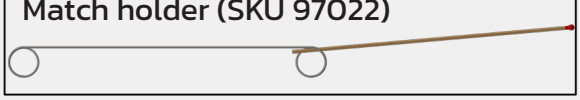

Burner Flames

Each burner on your grill is preset by the factory for best performance. However, many factors such as variations in your gas supply, or dirty/clogged air shutters and/or orifices may cause your burners to not operate as intended.

- Flames should be blue and stable. Any yellow flame (excluding at the very tips) indicates insufficient air supply.

- Flames should be quiet. A noisy, lifting flame indicates excessive air supply.

- Flame heights should be approximately:
  - ◊ 1/4" on "LOW"
  - ◊ 1-3/4" on "HIGH"

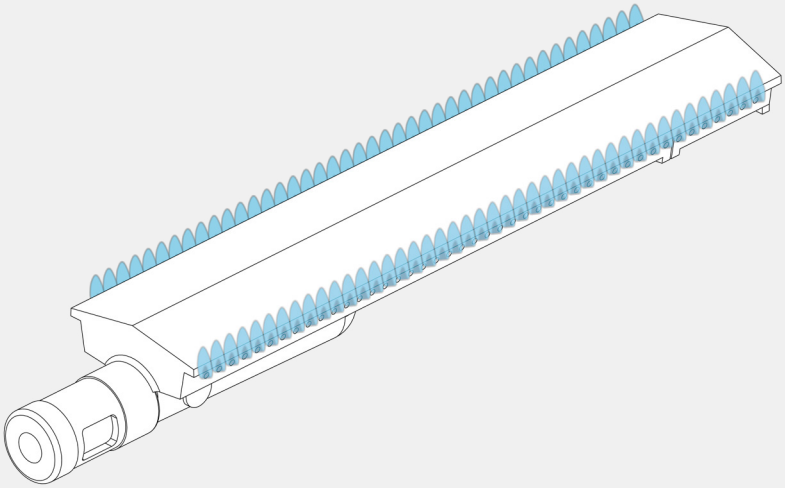

Air Shutter Adjustment:

With the grease tray removed, the air shutters are easily adjustable.

Simply loosen the single screw present on each burner which secures the shutter to the burner and rotate the shutter as needed to correct the issues mentioned above.

- If too much air is being supplied (noisy, lifting flame), rotate the shutter to restrict the amount of air entering the burner.
- If too little air is being supplied (yellow/orange flame), rotate the shutter to allow for more air to enter the burner.
- Once adjustments have been made, tighten the screw back to prevent the shutter from shifting during operation.

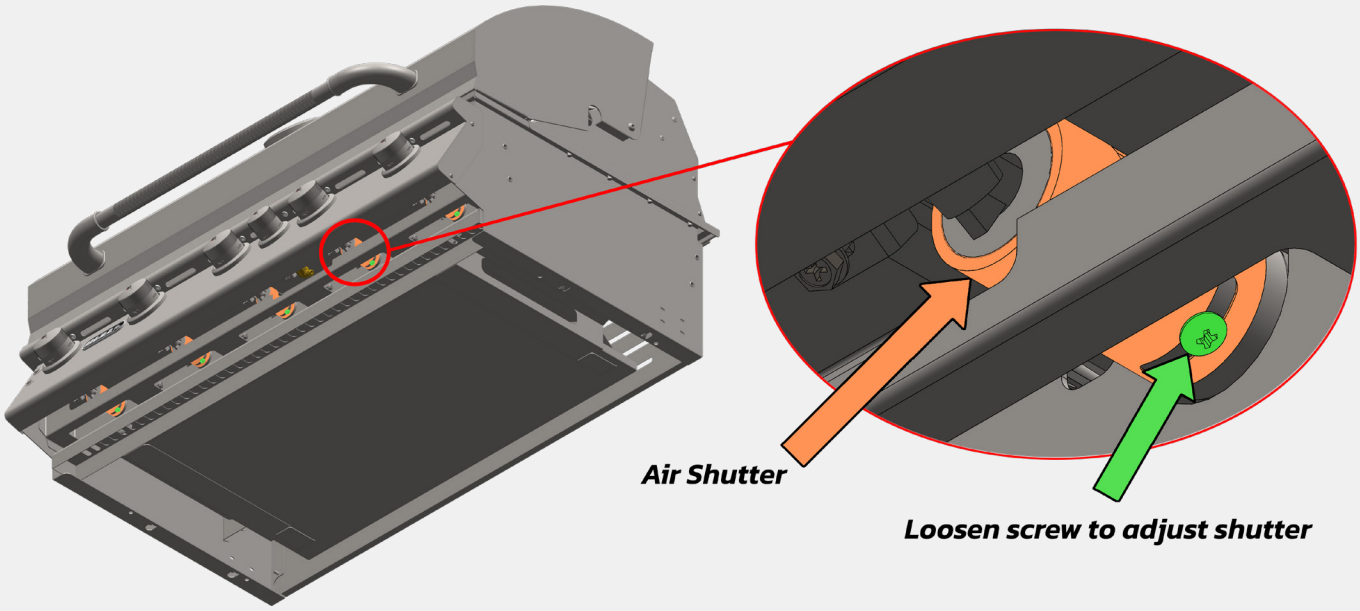

Burner Maintenance

Proper maintenance of your grill burners will not only keep your burners in pristine shape, but also reduces the risk of flashbacks as described on page 4.

At least once a month, or when your grill has not been used for a prolonged period of time, it is imperative to inspect and clean your burners. To properly inspect and clean your burners, they should first be removed from the grill as instructed below.

If this is the first time you are disassembling your burners, you will need to remove five cotter pins before being able to take out the burners.

Before proceeding, always follow these instructions:

1. Do not attempt to remove burners during or immediately after use.
2. Allow the grill to cool completely before touching.
3. Always ensure the supply gas is turned off.
4. All the burner control knobs should be set to the "OFF" position.
5. Remove the grease tray, flame tamers, warming rack, and cooking grates.
6. Disconnect the flexible fuel line from the manifold. This line is behind the right side of the control panel and can be accessed from underneath the grill.

The procedure for removing the cotter pins is as follows:

- Locate the five cotter pins holding the burners in place towards the rear panel of the grill (hidden in the image to the right for clarity).
- Using long-nosed pliers, clamp onto the loop of the cotter pin and pull the cotter pin out.
- The cotter pins were only necessary for shipping/handling and are no longer necessary. They can be discarded or retained for future use.

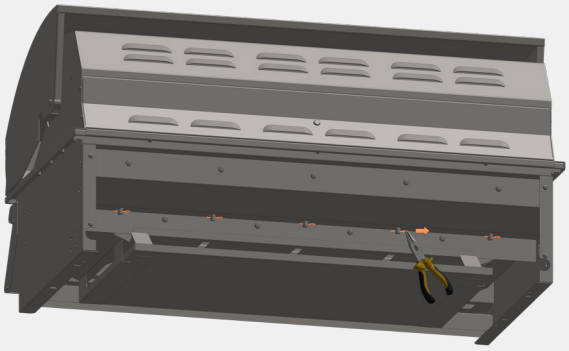

For additional resources on removing these cotter pins, scan the QR code, or visit: https://www.youtube.com/watch?v=yhlJR5svLSA

- With the internal components and cotter pins removed, lift the burner up and out of the hole.
- Slide the burner toward the rear of the grill to free the burner from the valve.
- Now that the burner is removed from the grill, they can be inspected and cleaned.

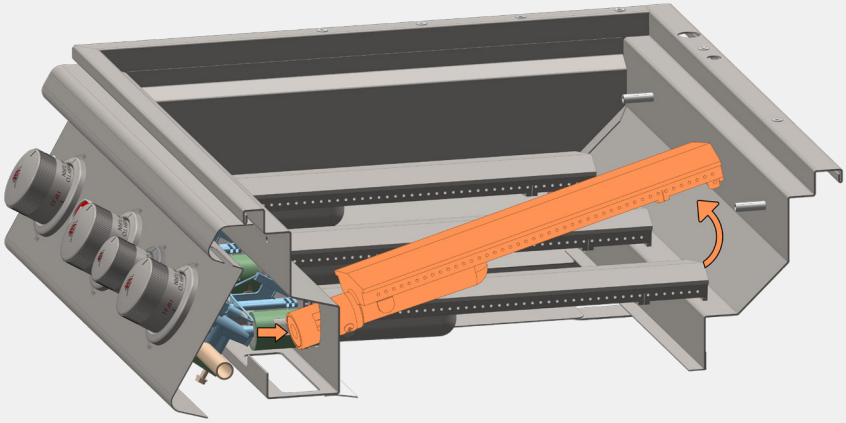

- Begin by inspecting the burner tube and all outlet ports, and verify they are damage free and clear of debris.
- Check for any signs of corrosion, cracks, or holes. If any such damage is identified, order and install a new burner before returning to service.
- Clean the burner(s) as detailed to the right.
- Once inspected and cleaned, re-install the burner(s) following the procedure outlined below.

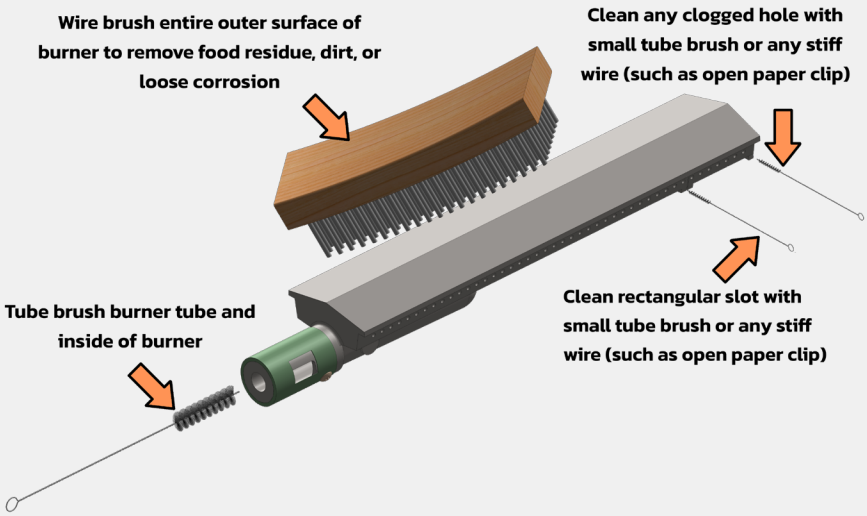

Burner Installation

To install your burner after removal, simply reverse the steps outlined on the bottom of page 17.

- Slide the burner back onto the gas valve far enough to allow the burner retainer post to rest in the retaining hole where the cotter pins were installed previously.

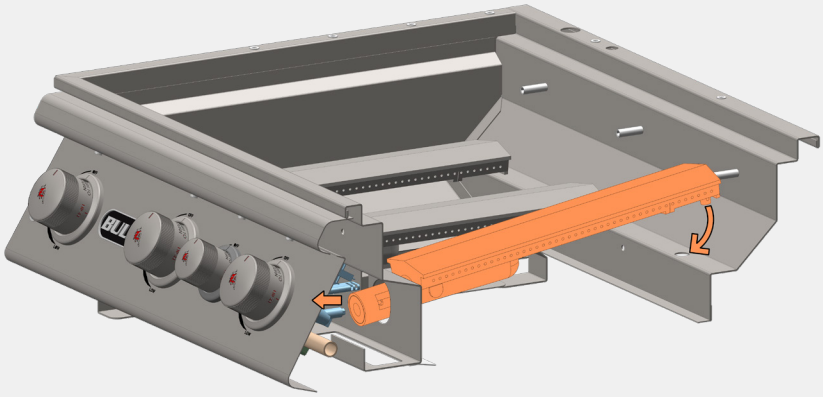

- Verify that the burner tube is properly located with respect to the burner valve orifice as shown below.

WARNING: If the valve orifices do not fit inside the burner tubes, lighting the burners may cause an explosion and/or fire

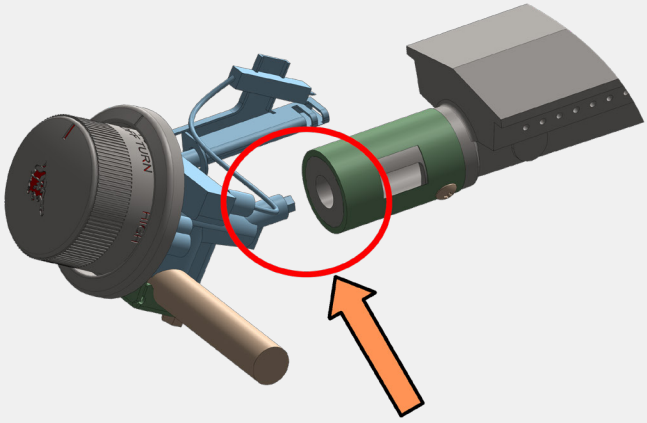

INCORRECT POSITION (NOTE GAP BETWEEN BURNER TUBE AND BURNER ORIFICE)

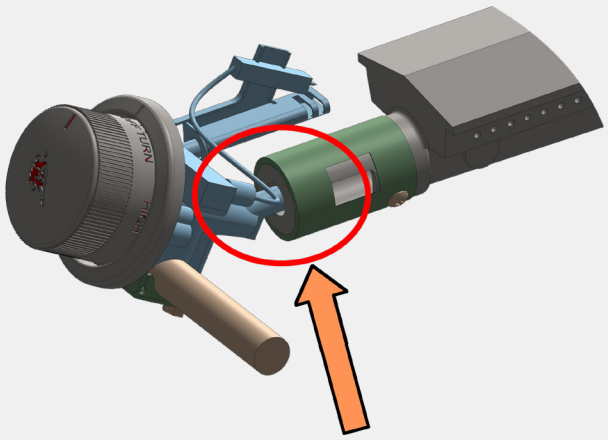

CORRECT POSITION

Ignition System Inspection:

After re-installation of the burners is a good time to perform an inspection on your grill's ignitors. This is accomplished with the following procedure:

1. Ensure the supply gas to the grill is turned off.
2. Ensure all control knobs on the grill are set to the "OFF" position.
3. One-by-one, push in each control knob and slowly turn approximately 1/4 turn counterclockwise until an audible *CLICK* is heard. Prior to the click, look near the valve's ignitor orifice and be on the lookout for a blue spark at the electrode tip by the ignitor orifice.
4. Once the click is heard, determine if a blue spark was present. If not refer to page 20 for troubleshooting.

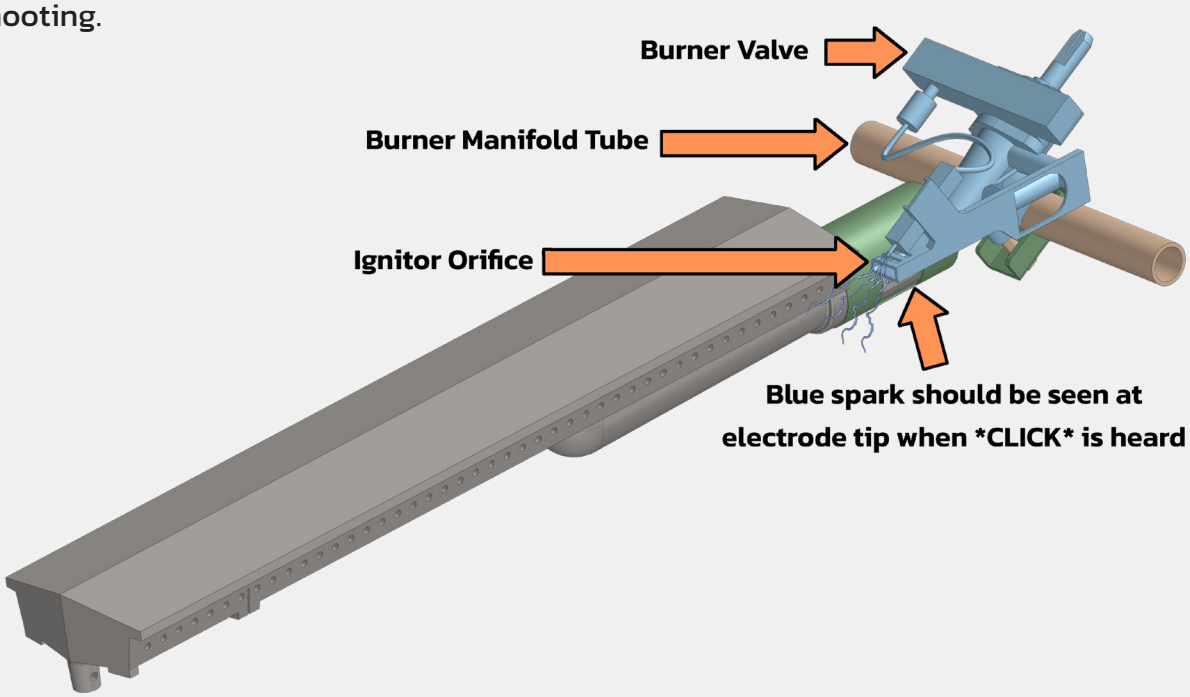

Cleaning the Grill

Your Grill's outstanding luster and durability is attributed to Stainless Steel construction. Stainless Steel has an outer layer that relies on a proper cleaning and maintenance routine as the best way to prevent corrosion. Please note, Stainless Steel is not 'rust proof' contrary to widespread belief. Grills are at higher risk of corrosion by exposure to chemicals, caustics and fertilizers from swimming pools and outdoor landscaping. Locations with climates with greater heat and humidity will intensify this condition. By following a proper cleaning routine, you will add to the years you enjoy your Bull grill.

Cooking Grates:

After cooking, turn control knobs to "OFF" and let grill cool before attempting to clean your cooking grids. Before first use and periodically it is suggested that you wash the cooking grids in a mild soap and warm water solution. You can use a washcloth or a vegetable brush to clean your cooking grids.

Flame Tamers & Heat Shields:

Washing the flame tamers & heat shields after every use is not necessary but periodically it is suggested you wash them in a soap and warm water solution. Use a wire brush to remove stubborn cooking residue. Dry the flame tamers & heat shields thoroughly before you reinstall it in the cooking insert.

Grease Tray:

The grease tray should be emptied and wiped down periodically and washed as needed.

Ignition Rod Chain (SKU 97022):

The ignition rod chain should be cleaned periodically by soaking it in soapy water to remove any stubborn stains.

Grill Housing:

Burning-off the grill after every cookout will keep it ready for instant use. However, periodically the grill should be cleaned thoroughly to ensure optimal performance. Bull recommends doing the following on an annual basis:

1. Shut off gas supply at source and disconnect fuel line from gas valve manifold. Protect fuel line fitting.
2. Remove and clean the cooking grates, flame tamers, heat shields, and burners.
3. Remove the warming rack and wash with mild detergent and warm water.
4. Cover the gas valve orifice with a piece of aluminum foil.
5. Brush the inside and bottom of the grill with a stiff wire brush and wash down with a mild soap and warm water solution. Rinse thoroughly and let dry.

IMPORTANT: Do not line the bottom of the grill housing with aluminum foil, sand, or any other grease absorbent substance. Grease will not be able to drip down into the grease collector as intended and a grease fire could occur. Bull offers a grease tray liner (SKU# 24268) for easy clean up and maintenance.

Troubleshooting

If your grill is not functioning properly, use this troubleshooting table below to diagnose and address your issue. If you are unable to remedy your problem, consult your grill dealer or gas appliance service person.

Issue	What to do
Grill Fails to Light	• Turn off gas at supply-end, turn control knobs to the "OFF" position. • Check gas supply and all connections. • Wait five minutes. • Repeat standard lighting procedure on Page 14. • If issue still persists, check for potential causes below.
Obstruction in Gas Line	• Disconnect fuel line from grill. • Open gas supply briefly to dislodge any obstructions from the fuel line. • Close off the supply line at the source and reconnect the supply to the grill.
Misaligned Ignitor	• Check the position of the electrode tip on each burner valve. The tip of the electrode should be pointing forward toward the burner and free from grease where the spark discharges. • The ignition wire should be rigidly connected to the valve ignition and electrode. • Replace the ignition wire if broken or cracked. • Verify ignitor is working properly by following procedure outlined on Page 19.

Issue	What to do
Plugged Burner Orifice 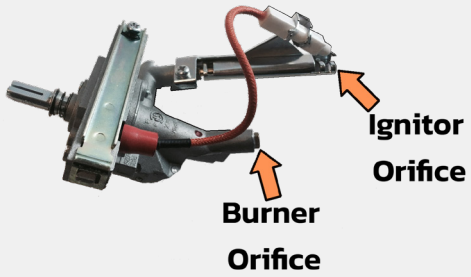	• Remove burners following instructions starting on Page 17. • Remove the orifice located on the burner valve. • Gently clean with a fine wire to clear any obstruction that may be present. • Reinstall burner orifice. • Reinstall burners, properly seating over orifice as shown on Page 18. • Perform ignitor test (Page 19) to confirm it is working. • Replace cooking components and grease collectors before attempting to light the grill.
Burner Flame is Yellow	• The burner may have seasoning salts, oil film, or other foreign matter causing the discolored flame. Clean the burner with a wire brush and see if problem persists. • Air shutter on gas valve may need adjustment (Page 16). Increase air supplied to valve by opening the shutter.
Burner Flame is Lifting/Noisy	• Air shutter on gas valve may need adjustment (Page 16). Decrease air supplied to valve by closing shutter.
Flashback	• When a fire occurs in or around the burners, immediately turn off the gas supply. • Turn all control knobs to the "OFF" position. • Wait until the grill has cooled completely. • Remove the affected burner(s) following instructions on Page 17. • Clean the burner(s) as shown on Page 18.

IMPORTANT: During troubleshooting you may find re-ignition necessary. Do not re-light the grill while it is still hot. You must wait at least five minutes to allow accumulated gas to disperse.

Product Warranty and Registration

Thank you for choosing Bull Outdoor Products. To enable our commitment to your satisfaction, you will need to register your purchase for it to be covered under Bull's warranty policy. Please save your purchase receipt as it is required for warranty claims. Additionally, registering your purchase will allow Bull or your Bull Authorized Dealer to utilize the encoded information for the purpose of ordering replacement parts or additional accessories to ensure your purchase remains in optimal working condition. To validate your warranty, we offer two options as shown below:

Option 1: Online Registration

Registration can be completed on the Bull Customer Service Portal

Scan the QR code, or visit: https://api.bullbbq.com/c/

Option 2: Mail-in Registration

Complete the Product Warranty Registration Card located in the shipping box. A reference of the card is shown to the right.

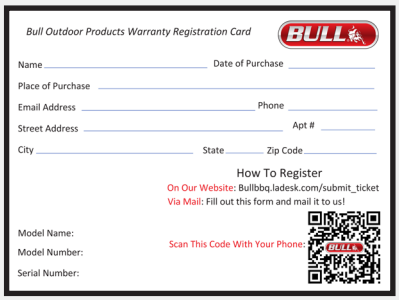
Bull Outdoor Products Warranty Registration Card

Name _____ Date of Purchase _____

Place of Purchase _____

Email Address _____ Phone _____

Street Address _____ Apt # _____

City _____ State _____ Zip Code _____

How To Register

On Our Website: Bullbbq.ladesk.com/submit_ticket

Via Mail: Fill out this form and mail it to us!

Model Name:

Model Number:

Serial Number:

Scan This Code With Your Phone:

Mail the completed card to:

BULL OUTDOOR PRODUCTS, INC.
15 East Ave, Athens, TN
Attn: Warranty Service Center

Unpacking the Grill:

We have created a helpful video to show you how to unbox, install components, and more.

Scan the QR Code, or Go to https://bullbbq.com/bull-support-videos/

After opening the box, carefully inspect the contents for any damage. Contact our service center or local dealer for replacement of any damaged/missing parts. If damaged, do not attempt to install.

Ordering Replacement Parts:

Please refer to your owner's manual parts list and illustration(s) to identify what you need. Have your serial number ready. Replacement parts can be purchased via two options.

Option 1: Online

Scan the QR code, or visit:
https://bullbbq.com/replacement-parts

Option 2: Phone

We have two authorized parts distributors ready to assist.

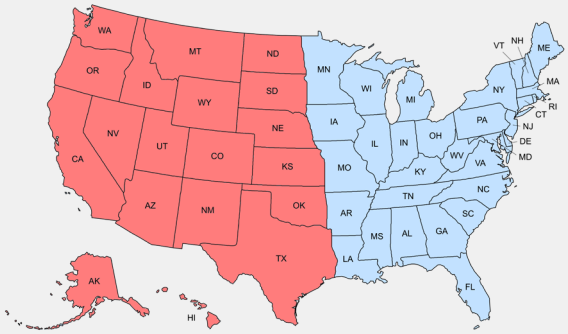

Western Region
(800) 258-6810

Eastern Region
(800) 229-3056

Serial Number Locations:

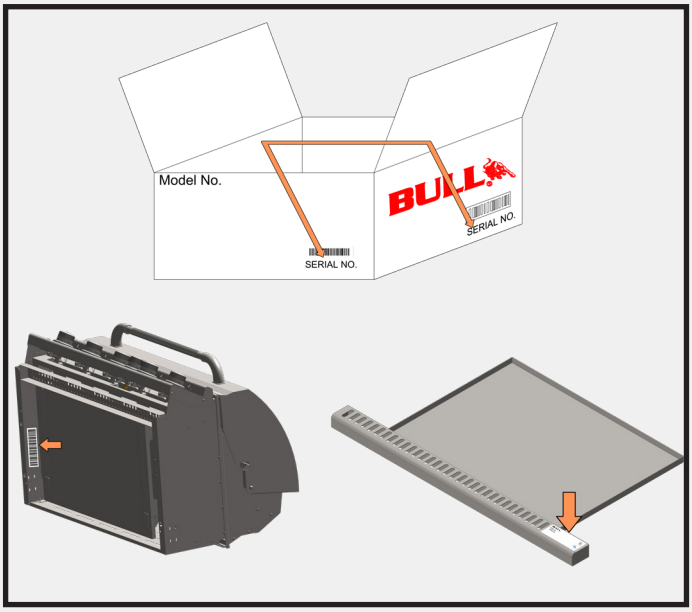

Replacement Parts List

ITEM NUMBER	BULL SKU#	DESCRIPTION	QTY	WARRANTY PERIOID (YEARS)
1	57003	INSERT ASSEMBLY (2016 & OLDER MODELS)	1	LIFETIME
	57025	INSERT ASSEMBLY (2017 & NEWER MODELS)		
2	57014	BACK PANEL (2016 & OLDER MODELS)	1	1
	57024	BACK PANEL (2017 & NEWER MODELS)		
3	52030	FRONT LID	1	1
4	55523	LID HANDLE END CAP	2	3
5	57571	KNURLED LID HANDLE	1	3
6	16635	RUBBER BUMPER FOR LID	2	1
7	16692	TEMPERATURE GAUGE BEZEL	1	1
8	52043	TEMPERATURE GAUGE	1	1
9	57018	REAR LID (2016 & OLDER MODELS)	1	1
	57002	REAR LID (2017 & NEWER MODELS)		
10	57012	REAR LID COVER (2016 & OLDER MODELS)	1	1
	57017	REAR LID COVER (2017 & NEWER MODELS)		
11	57006	WARMING RACK	1	3
12	16517	COOKING GRATE	5	LIFETIME
13	16631	VENTED FLAME TAMER	5	3
14	35717	CAST STAINLESS STEEL BURNER	5	LIFETIME
15	16670	HEAT SHIELD	4	1
16	47007	INFRARED BACK BURNER	1	1
17	57005	GREASE TRAY	1	1
18	97022	LIGHTING ROD WITH CHAIN	1	1
19	16571	LOGO PLATE FOR CONTROL PANEL	1	1
20	57004	CONTROL PANEL (2025 & OLDER MODELS)	1	1
	57572	CONTROL PANEL (2026 & NEWER MODELS)		
21	16629	BEZEL, MAIN BURNER	5	1
22	16613	KNOB, MAIN BURNER	5	1
23	16630	BEZEL, INFRARED BURNER	1	1
24	16617	KNOB, INFRARED BURNER	1	1

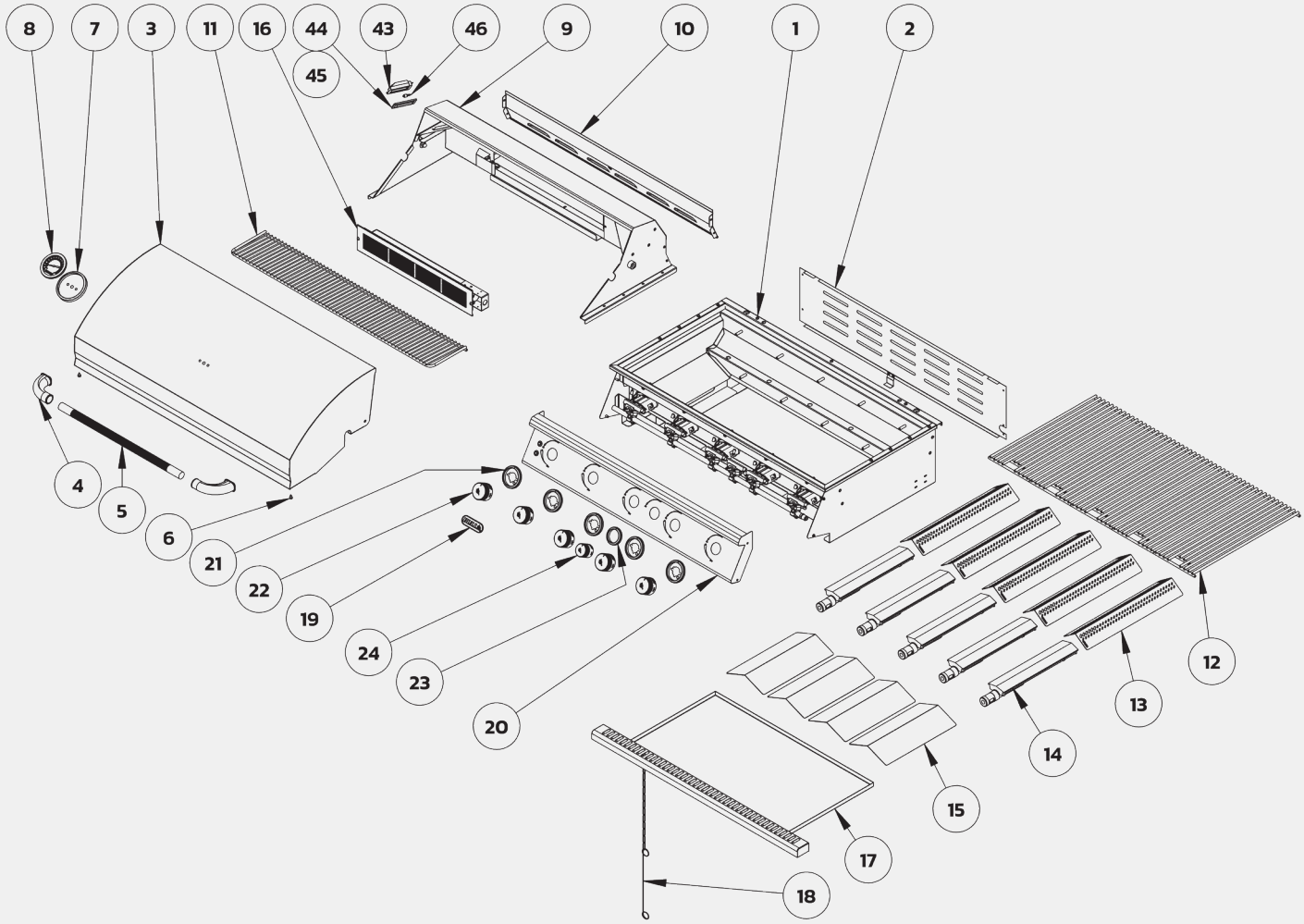

WARNING: Use of any part that is not factory authorized will void your warranty and may be dangerous.

Gas Plumbing Replacement Parts List

ITEM NUMBER	BULL SKU#	DESCRIPTION	QTY	WARRANTY PERIOID (YEARS)
25	47006	STAINLESS STEEL FLEX HOSE	1	1
26	57008	MANIFOLD	1	3
27	16525	GAS VALVE, MAIN BURNER (LP ONLY)	5	1
28	16598	3/8" FLARE TO 3/8" FLARE UNION (LP ONLY)	1	1
29	16589	LP REGULATOR HOSE ASSEMBLY (LP ONLY)	1	1
30	16524	GAS VALVE, MAIN BURNER (NATURAL GAS ONLY)	5	1
31	16599	3/8" NPT TO 3/8" FLARE ADAPTER (NG ONLY)	2	1
32	16507	REGULATOR (NG ONLY)	1	1
33	16526	GAS VALVE, INFRARED BURNER	1	3
34	47009	STAINLESS STEEL FLEX HOSE (39IN)	1	1
35	16527	NOZZLE, INFRARED BURNER (LP ONLY)	1	1
36	16528	NOZZLE, INFRARED BURNER (NG ONLY)	1	1
37	16671	BACK BURNER ORIFICE AIR INLET GUARD	1	1

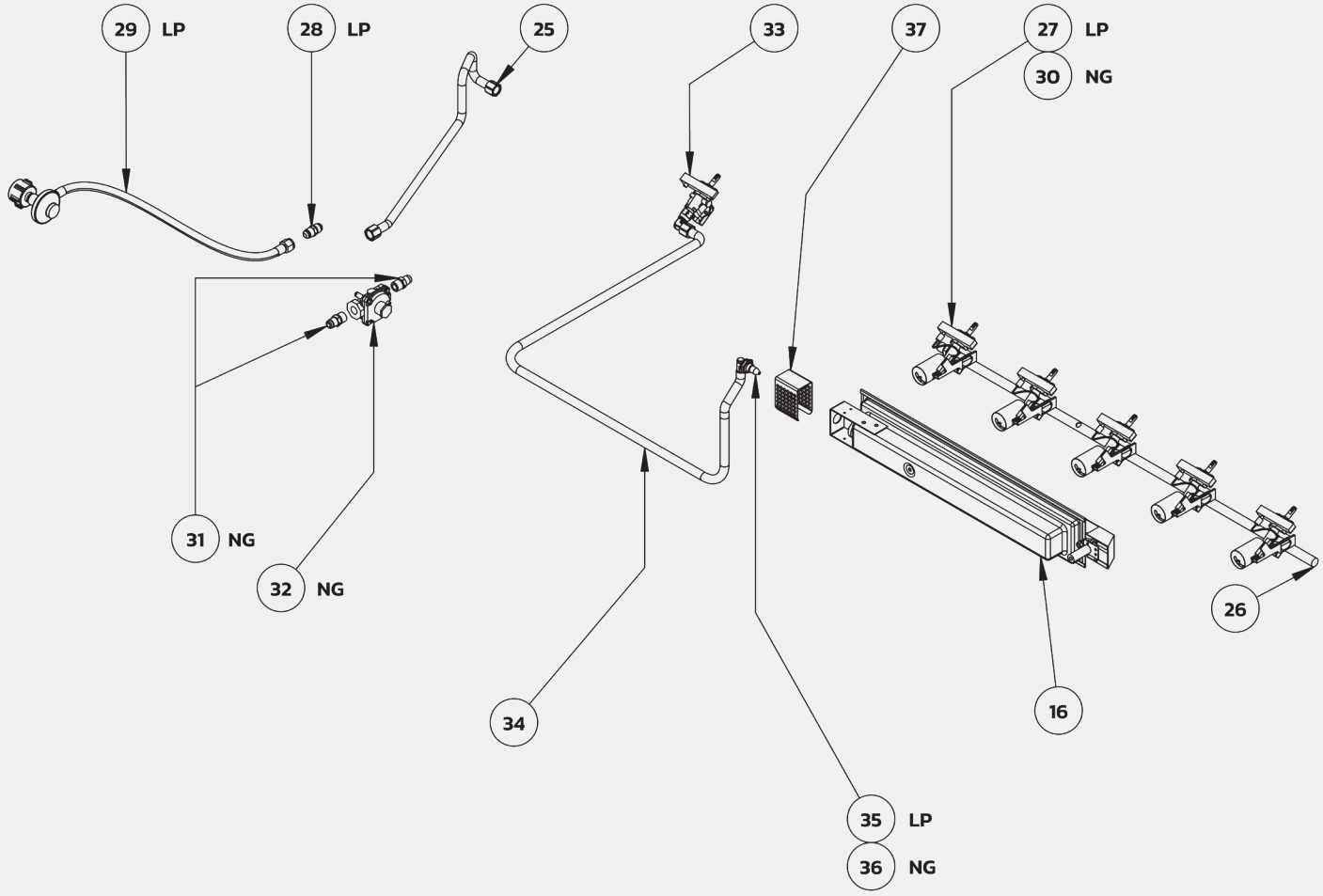

WARNING: Use of any part that is not factory authorized will void your warranty and may be dangerous.

Electrical Replacement Parts List

ITEM NUMBER	BULL SKU#	DESCRIPTION	QTY	WARRANTY PERIOID (YEARS)
38	16511	BACK BURNER ELECTRODE	1	1
39	16672	BACK BURNER ELECTRODE GUARD	1	1
40	16512	BACK BURNER IGNITION WIRE	1	1
41	16612	PUSH BUTTON LIGHT SWITCH	2	1
42	57570	MAIN WIRING HARNESS (2025 & OLDER MODELS)	1	1
	52039	MAIN WIRING HARNESS (2026 & NEWER MODELS)		
43	16627	LIGHT HOUSING	2	1
44	16530	LIGHT LENS	2	1
45	16529	LIGHT LENS CLIP	2	1
46	16532	LIGHT BULB	2	N/A
47	16634	QUICK DISCONNECT TRANSFORMER PIGTAIL	1	1
48	16534	TRANSFORMER	1	1
49	52036	LED WIRE HARNESS	1	1
50	52013	RED LED BULB	6	1

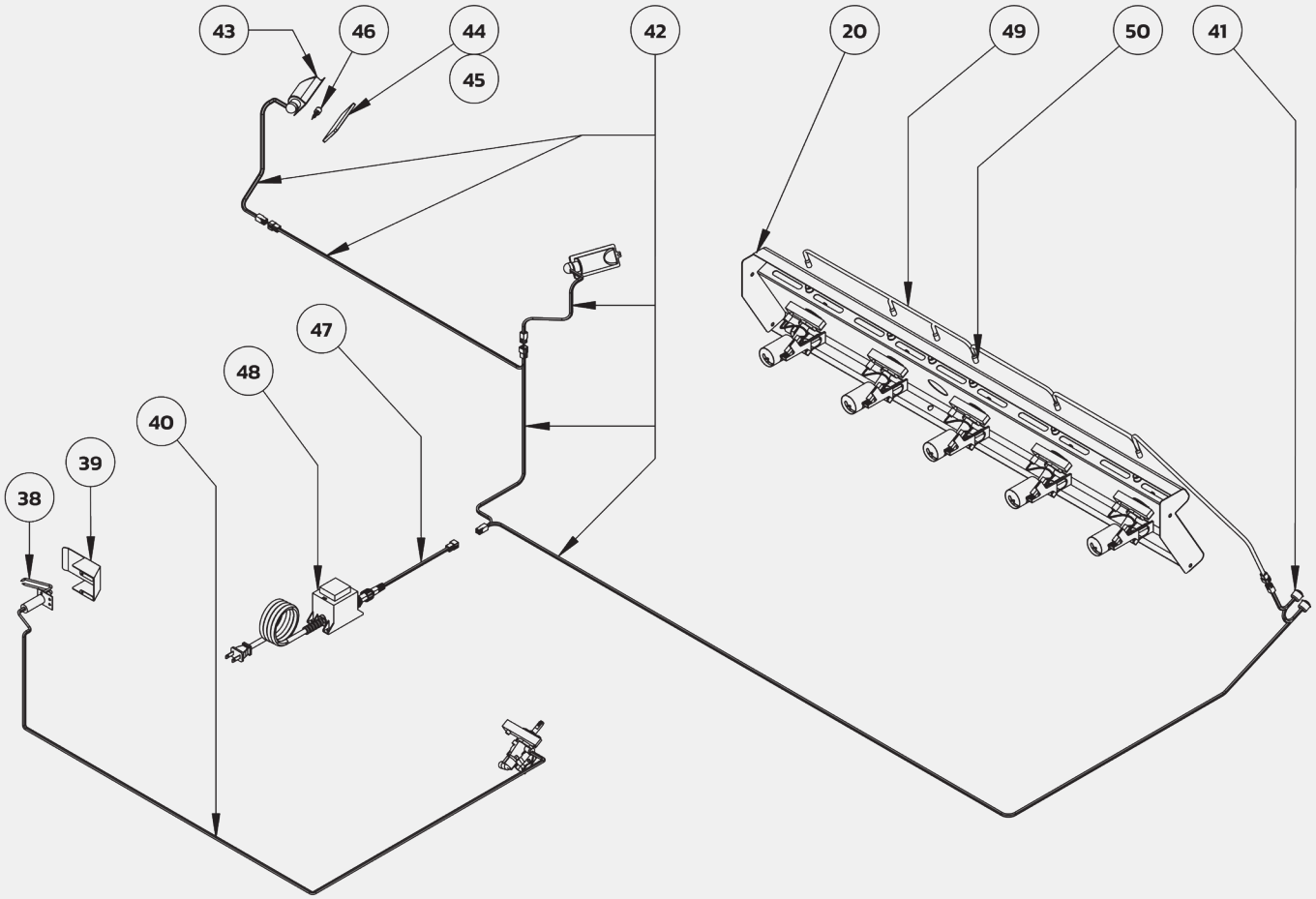

WARNING: Use of any part that is not factory authorized will void your warranty and may be dangerous.

Warranty Policy

LIMITED WARRANTY ON BULL OUTDOOR PRODUCTS, INC., PRODUCTS

THIS LIMITED WARRANTY GIVES YOU SPECIFIC LEGAL RIGHTS. YOU MAY ALSO HAVE OTHER RIGHTS, WHICH VARY FROM STATE TO STATE.

THIS LIMITED WARRANTY CAN ALSO BE FOUND ON OUR WEBSITE AT:
https://www.bullbbq.com/support-warranty **(United States Customers)**
https://www.bullbbq.eu/customer-care/#warranty-registration-form **(International Customers)**
AND IN THE OWNER'S/INSTALLATION MANUALS THAT WE PROVIDE WITH OUR PRODUCT

THIS LIMITED WARRANTY IS SUBJECT TO THE EXCLUSIONS, CONDITIONS AND LIMITATIONS SET FORTH BELOW.
ANY IMPLIED WARRANTIES IMPOSED BY LAW, INCLUDING WITHOUT LIMITATION TO THE IMPLIED WARRANTIES OF MERCHANTABILITY AND FITNESS FOR A PARTICULAR PURPOSE, ARE LIMITED IN DURATION TO THE DURATION OF THIS EXPRESSED LIMITED WARRANTY. SOME STATES DO NOT ALLOW LIMITATIONS ON HOW LONG AN IMPLIED WARRANTY LASTS, SO THE ABOVE LIMITATION MAY NOT APPLY TO YOU.

WHO MAY USE THIS WARRANTY?

BULL OUTDOOR PRODUCTS, INC. located at address 15 East Ave. Athens, TN 37303 ("We") extend this limited warranty only to the consumer who originally purchased the product ("you") at the original site of delivery or installation. It does not extend to any subsequent owner or other transferee of the product. It does not extend to any rental, commercial, or non- residential application. Examples of excluded applications include, but are not limited to day care centers, schools, bed and breakfast centers, churches, private clubs, fire stations, club houses, Common areas in multi-family dwellings, restaurants, hotels, nursing homes, food service locations, and institutional food service locations.

WHAT DOES THIS WARRANTY COVER?
This limited warranty covers defects in materials and workmanship of the product and product components identified below for the Warranty Periods defined below.

WHAT IS THE PERIOD OF COVERAGE?
This limited warranty starts on the date of your purchase and lasts for the time periods specified on the next page. The Warranty Period is not extended if we replace the product. We may change the availability of this warranty at our discretion, but any changes will not be retroactive.

Grilling/Pizza Accessories and Grill Covers DO NOT include a warranty period

Grill Warranty Periods

The following parts are covered for **1 year** on all our current gas grill models:

- The lid, control panel, grease tray, bezels, knobs, temperature gauge, valves, regulator, flex tubes, rotisserie burner, transformer, and all components of the lighting system.

The following parts are covered for **3 years** on all our current gas grill models:

- The manifold, handle end caps, flame tamers, heat shields, and warming rack.

The following parts are covered for the **Lifetime** on all our current gas grill models:

- Insert assembly and the grates.

The warranty period for the grill burners varies by type:

- Cast stainless steel burners – **Lifetime**
- Welded stainless steel burners – **5 years**
- Porcelain coated burners – **3 years**

The warranty period for the charcoal grill is **1 year** on all parts, except for the insert assembly, which is covered for **5 years**.

Component Warranty Periods

All the parts for our components /grill carts/refrigerators/kegerators/drawers/doors/refrigerator frames/grill
jackets/finishing frames/ice chest/sinks/bar center and vent hoods are covered for **1 year** with these exceptions:

- **Power Burner**
  - The insert/grates are **lifetime** covered parts.
  - The manifold/burner are covered for **3 years**.
- **Searing Station/Slide in Double Sideburner**
  - The grates are covered for **lifetime**,
  - The insert for **5 years**, and
  - The manifold for **3 years**.
- **Single Sideburner**
  - The grates are covered for **5 years** and
  - The burner for **3 years**.
- **Sidekick**
  - The burner is covered for **3 years**.
- **Heaters**
  - The heater replacement parts are covered for **3 years**.
- **Pizza Ovens/Islands/Fire Features Warranty Periods**
  - All of the parts and construction materials are covered for **1 year**.

WHAT DOES THIS WARRANTY NOT COVER?
This limited warranty does not cover any damage due to:
• Transportation.
• Storage
• Improper installation or use.
• Use on improper fuel/gas supply.
• Failure to follow the product instructions or to perform any preventive maintenance.
• Modifications.
• Normal wear and tear, rust, corrosion, oxidation, or discoloration.
• External causes such as accidents, abuse, or other actions or events beyond our reasonable control.

WHAT OPTIONS ARE OFFERED BY BULL OUTDOOR PRODUCTS UNDER THIS WARRANTY?
With respect to any defective product claim made during the Warranty Period, we will, in our sole discretion:
• Replace such product (or the defective part) free of charge.

WHAT IS EXCLUDED BY BULL OUTDOOR PRODUCTS UNDER THIS WARRANTY?
• We will not pay for shipping charges for replacement parts, or for any labor or labor related charges.
• We will not pay for any accessory products or ancillary products purchased by you for use in connection with the product.

HOW DO YOU NOTIFY BULL CUSTOMER SERVICE OF A POTENTIAL WARRANTY ISSUE?
Our Customer Service is ready to help. Here's how to reach us:

By Phone (800) 521-2855 Monday through Friday from 8:00 a.m. to 5:00 p.m. (EDT)

To submit a warranty, claim on-line or message go to https://www.bullbbq.com/support-warranty

LIMITATION OF LIABILITY

THE REMEDIES DESCRIBED ABOVE ARE YOUR SOLE AND EXCLUSIVE REMEDIES AND OUR ENTIRE LIABILITY FOR ANY BREACH OF THIS LIMITED WARRANTY. OUR LIABILITY SHALL UNDER NO CIRCUMSTANCES EXCEED THE ACTUAL AMOUNT PAID BY YOU FOR THE DEFECTIVE PRODUCT, NOR SHALL WE UNDER ANY CIRCUMSTANCES BE LIABLE FOR ANY CONSEQUENTIAL, INCIDENTAL, SPECIAL OR PUNITIVE DAMAGES OR LOSSES, WHETHER DIRECT OR INDIRECT.

SOME STATES DO NOT ALLOW THE EXCLUSION OR LIMITATION OF INCIDENTAL OR CONSEQUENTIAL DAMAGES, SO THE ABOVE LIMITATION OR EXCLUSION MAY NOT APPLY TO YOU.

v2025.02.14